MARTINS INDUSTRIES

MARTINSINDUSTRIES.COM

MJS-12T

WEIGHT	**26.7 kg / 58.75 lb**
LIFTING RANGE	**487 mm - 752 mm / 19 3/16" - 29 5/8"**
CAPACITY (PER PAIR)	**12000 kg / 26400 lb**
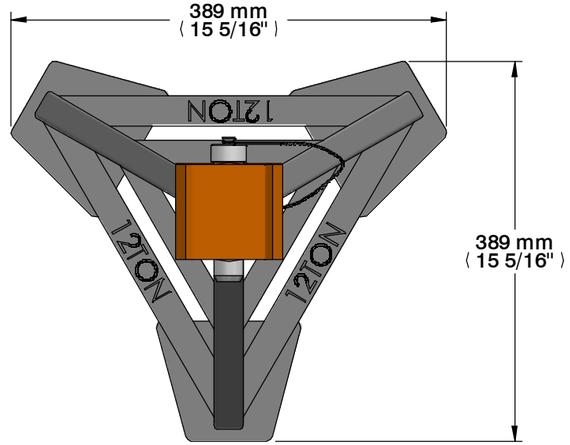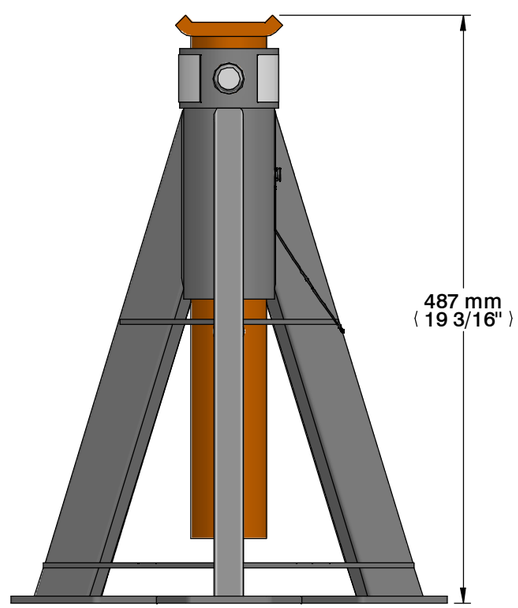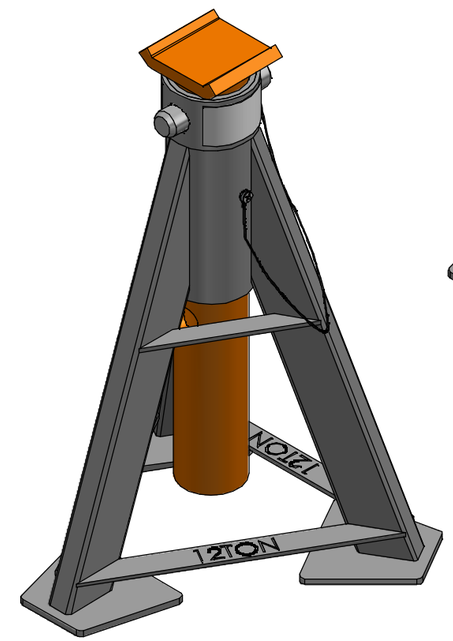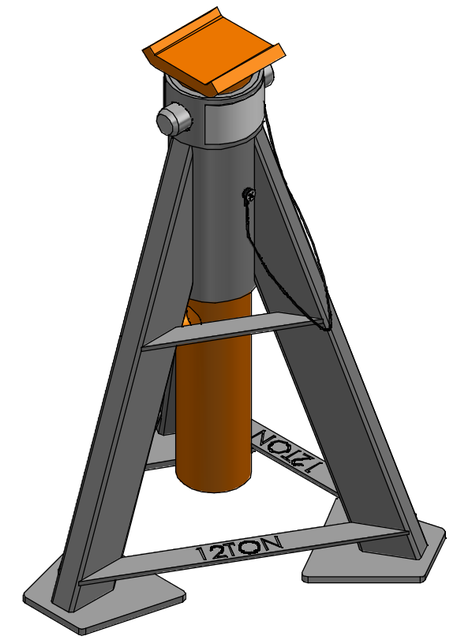
THIS DRAWING AND THE INFORMATION CONTAINED IN THIS DOCUMENT IS THE PROPERTY OF **INDUSTRIES MARTINS INC.** AND SHALL NOT BE REPRODUCED, COPIED, MODIFIED, OR USED WITHOUT THE WRITTEN PERMISSION OF **INDUSTRIES MARTINS INC.**